HAL
open science

Preliminary investigation of the microwave pyrolysis mechanism of sludge based on high frequency structure simulator simulation of the electromagnetic field distribution

R. Ma, N. Yuan, S. Sun, P. Zhang, L. Fang, X.-H. Zhang, X. Zhao

To cite this version:

R. Ma, N. Yuan, S. Sun, P. Zhang, L. Fang, et al.. Preliminary investigation of the microwave pyrolysis mechanism of sludge based on high frequency structure simulator simulation of the electromagnetic field distribution. Bioresource Technology, 2017, 234, pp.370-379. 10.1016/j.biortech.2017.02.076 . hal-01515158

HAL Id: hal-01515158

https://univ-rennes.hal.science/hal-01515158

Submitted on 4 Jul 2017

HAL is a multi-disciplinary open access archive for the deposit and dissemination of scientific research documents, whether they are published or not. The documents may come from teaching and research institutions in France or abroad, or from public or private research centers.

L'archive ouverte pluridisciplinaire **HAL**, est destinée au dépôt et à la diffusion de documents scientifiques de niveau recherche, publiés ou non, émanant des établissements d'enseignement et de recherche français ou étrangers, des laboratoires publics ou privés.

ACCEPTED MANUSCRIPT

Preliminary Investigation of the Microwave Pyrolysis Mechanism of Sludge Based on High Frequency Structure Simulator Simulation of the Electromagnetic Field Distribution

Rui Ma[a], Nana Yuan[a], Shichang Sun[1a,c]*, Peixin Zhang[a], Lin Fang[a]*, Xianghua Zhang[a,b], Xuxin Zhao[a]

[a] *College of Chemistry and Enviromental Engineering, Shenzhen University, Shenzhen, 518060, China*;

[b] *Laboratory of Glasses and Ceramics, Institute of Chemical Science, University of Rennes 1, Rennes 35042, France*;

[c] *College of Optoelectronic Engineering, Shenzhen University, Shenzhen, 518060, China.*

ABSTRACT: Under microwave irradiation, raw sludge was pyrolyzed mainly by evaporation of water, with a weight loss ratio of 84.8% and a maximum temperature not exceeding 200°C. High-temperature pyrolysis of SiC sludge could be realized, with a weight loss ratio of 93.4% and a final pyrolysis temperature of 1131.7°C. Variations between the electric field intensity distribution are the main reason for the differences of pyrolysis efficiencies. HFSS simulation showed that the electric field intensity of the raw sludge gradually decreased from 2.94×10^4 V/m to 0.88×10^4 V/m when pyrolysis ends, while that of SiC sludge decreased from 3.73×10^4 V/m at the beginning to 1.28×10^4 V/m, then increased to 4.03×10^4 V/m. The electromagnetic effect is the main factor ($r\geq0.91$) influencing the temperature increase and weight loss of raw sludge. Both the

[1] [1] *Corresponding author: email: sunshichang@szu.edu.cn;
*Co-corresponding author: fanglinhit@163.com
Full postal address: No. 3688, Nanhai Road, Nanshan District, Shenzhen, China, 518060.

ACCEPTED MANUSCRIPT

electromagnetic effect and heat conduction effect influenced temperature rise and weight loss of SiC sludge, but the former's influence was comparatively larger.

Keywords: Raw sludge; SiC sludge; Microwave pyrolysis; HFSS simulation; Electric field intensity

1. INTRODUCTION

The high output of sludge and costs associated with its treatment and disposal have become an important problem and challenge faced by urban sewage treatment plants. Sludge treatment and disposal methods such as landfill, agricultural utilization, drying and incineration will lead to problems like shortage of land resources, security risks and secondary pollution (Hong et al., 2009; Peccia and Westerhoff, 2015). Moreover, it is difficult to achieve resource recycling with these methods; thus, they cannot meet the needs of future urban development. The pyrolysis technology, which has a high energy utilization ratio, high volume reduction ratio and low operating cost, not only can effectively treat the excess sludge, but also can efficiently solve secondary pollution problems caused by sludge (Trung et al., 2013) and realize sludge treatment and energy recovery at the same time (Breulmann et al., 2015). It is even possible to offset the costs caused by purchasing and operating of sludge treatment equipment, providing an effective method for the reduction, recycling and hazard-free treatment of sludge. However, before traditional sludge pyrolysis is conducted, the wet sludge must be dried. The energy consumption ratio of sludge drying to the entire pyrolysis process to some extent determines the cost of sludge pyrolysis because sludge drying consumes abundant energy (Fonts et al., 2008). Moreover, the high content of (Polycyclic Aromatic Hydrocarbon) PAHs in traditional pyrolysis bio oil affects the quality of the oil (Dai et al., 2014), which is one of the bottlenecks that hinders the

ACCEPTED MANUSCRIPT

development of sludge pyrolysis. Therefore, developing low energy consumption and efficient sludge pyrolysis technology is of great importance to reducing the energy consumed by sludge pyrolysis.

When compared with traditional sludge pyrolysis, microwave pyrolysis of sludge takes less time, consumes less energy and produces fewer residues (Domínguez et al., 2006). By adding microwave energy absorbing materials to the sludge, the high temperature pyrolysis of the sludge in the microwave field is realized and new energy sources are generated (Menéndez et al., 2002; Borges et al., 2014). At present, currently available research on the microwave pyrolysis of sludge mainly focuses on the influences of different microwave absorbing materials and reaction control conditions on element migration and transformation, the dielectric constant, the sludge pyrolysis efficiency and the characteristics of its products (Inguanzo et al., 2002; Domínguez et al., 2005; Mohan et al., 2006; Tsai et al., 2009; Cao et al., 2010; Oasmaa et al., 2010; Tian et al., 2011; Zhang et al., 2013; Xie et al., 2014; Mulchandani and Westerhoff, 2016). Nevertheless, these studies can only explain the main factors that affect the speed and efficiency of the pyrolytic reaction and their mechanism of action at a macro level, while they cannot interpret how the electromagnetic energy is transformed into heat during the pyrolytic reaction process, nor can they explain the temperature rise mechanism during sludge microwave pyrolysis. By studying the electromagnetic field distribution during the sludge microwave pyrolysis, we can explore the mutual transformation relationship between electromagnetic energy and heat from a micro perspective. This will enable further explanation of the variations in aspects such as temperature rise and weight loss, which contribute to realization of the purpose of energy conservation and controlling reaction products caused by sludge

ACCEPTED MANUSCRIPT

microwave pyrolysis. However, no recent investigations of the electromagnetic field distribution during sludge microwave pyrolysis have been reported to date, and there are no data regarding the temperature rise mechanism of sludge under the electromagnetic field available.

There are currently no instruments available to measure the electromagnetic field distribution and field intensity in the microwave cavity, and they are instead generally worked out by simulated calculations realized through mathematical models or software. Despite this, relatively few studies of mathematical model simulation are available. By establishing a two-dimensional mathematical model, Rattanadecho (2006) and Ciacci et al. (2010) simulated changes in the electromagnetic field during the pyrolysis of wood, as well as the transformation of heat and substances during the chemical reaction process. Although they found that the results predicted by the model were in good agreement with the experimental data, the calculation process is complicated. Moreover, sludge is much more complicated than wood (Menéndez et al., 2004); therefore, it is more difficult to calculate the changes in the electromagnetic field that occur during the sludge pyrolysis. Software commonly used for simulations of electromagnetic fields include High Frequency Structure Simulator (HFSS), ANSYS, and FLUENT. These programs have been widely applied in ceramic sintering, welding, petrochemical, and food heating investigations (Yamada et al., 2005, 2006; Geedipalli et al.,2007; Giessler and Thess, 2009), and have achieved remarkable results, enabling optimization of the design of reactors used in ceramic sintering (Jin, 2009; Yao, 2015). Among these, HFSS refers to the three-dimensional electromagnetic simulation software employed to analyze various complicated microwave engineering problems based on the electromagnetic finite element method. The software uses the

ACCEPTED MANUSCRIPT

adaptive mesh generation technique to improve the accuracy and speed of calculation, and can directly provide simulated results such as characteristic impedance, propagation constant, S parameter, electromagnetic field, radiation field, antenna pattern, energy absorption rate, etc. Using HFSS to simulate the electromagnetic field distribution during the microwave pyrolysis process of sludge contributes to exploring the mutual transformation relationship between electromagnetic energy and heat in different stages of the pyrolysis process, so as to explain the mechanism of temperature rise and weight loss of sludge from a micro perspective. However, no studies have investigated the application of software simulation technology to analysis of the electromagnetic field distribution during the microwave pyrolysis of sludge to date.

Based on a contrastive analysis of temperature rise and weight loss of raw sludge and SiC sludge during the microwave pyrolysis process, the present study applied the three-dimensional simulation software HFSS to simulate the electromagnetic field distribution and variations in the field intensity during the different stages of the sludge pyrolysis process. Parameters such as the relative dielectric constant and dielectric loss tangent are combined to explain the reasons for changes in temperature rise and weight loss of the two sludges during different periods of time in the pyrolysis process based on differences in the micro electromagnetic field distribution. By comprehensively comparing and analyzing the variations in temperature rise, weight loss and electric field intensity distribution during pyrolysis of the two sludges, this study conducts a preliminary exploration of the temperature rise and weight loss mechanism during the microwave pyrolysis of sludge.

2. MATERIALS AND METHODS

ACCEPTED MANUSCRIPT

2.1 Experimental Materials

Dewatered sludge was obtained from an industrial sewage plant in Shenzhen City as the experimental material. By taking a small amount of sludge samples under the condition of 105 degrees Celsius, desiccation process was completed in an air-blast drying oven and the measured moisture content of sludge was 85%. The main properties of the sludge are shown in Table 1. The oxygen content in the sludge reached 30.53% and the H/C content reached 1.88. Moreover, the sludge contained many heavy metals and inorganic salts, indicating that it could be used as a good conductive medium, providing basic conditions for the microwave pyrolysis of sludge to be conducted.

2.2 Experimental Apparatuses

Figure 1 shows the apparatuses used in the microwave pyrolysis of sludge, including one self-made single-mode and linear adjustable microwave oven with a microwave frequency of 2450±50 MHz and available power of 2 KW, one thermocouple temperature measuring apparatus that could automatically control the temperature and be placed into the quartz tube to realize on-line measurement of temperature of the materials with a measuring range of 0°C to 1700°C, and the temperature in each stage of the pyrolysis process could be directly measured and recorded by the thermocouple, and one OPS far-infrared temperature instrument with a range of 0°C–1000°C to monitor the temperature inside the microwave oven. The system was also equipped with a timer to record the response time. An electronic balance (accuracy: 0.001 g) was introduced into the microwave cavity to achieve real-time monitoring of changes in quality of the quartz tube and record changes in the computer. Apparatuses used to collect gaseous and liquid products include the straight condenser pipe, three beaker flasks connected in series, and an air bag.

ACCEPTED MANUSCRIPT

2.3 Experimental Methods

This study employed two kinds of sludges: (1) raw sludge (water content: 85%) and (2) mixed sludge (20 g, containing 4 g SiC and 16 g raw sludge, with a mass proportion of SiC of 20%) containing silicon carbide in powder form that was used as the material to absorb the microwave. To ensure the inert gas atmosphere, high purity nitrogen gas was pumped into the microwave cavity for 20 min before the experiment and the flow rate was controlled at 200 mL/min. The flow rate became 10 mL/min after the microwave was fed and the microwave input power was 1000 W in the experiment. All of the experimental data presented in the study are average values obtained from multiple measurements.

2.4 Measurement of Dielectric Constant

To conduct an auxiliary analysis of the temperature rise and weight loss process of sludge under microwave irradiation, establish the HFSS simulation model and verify the simulation effect of HFSS on the electromagnetic field distribution, the dielectric constants of the raw sludge and SiC sludge in different stages of pyrolysis must be measured. The dielectric constant of a composite material is related to the dielectric constant, mass or volume fraction of its components and the environmental temperature (Dinulovic and Rasuo, 2009); however, currently available instruments can only measure the dielectric constants of pure substances under high temperature conditions or the dielectric constants of mixed substances under ambient temperature conditions. They are unable to measure the dielectric constant of the mixed sludge sample under high temperature pyrolysis conditions. Therefore, a vector network analyzer (Agilent N5244A) was employed in the present study to measure the relative dielectric constant ε_0' and the dielectric loss factor ε_0'' of the raw

ACCEPTED MANUSCRIPT

sludge and SiC sludge in different stages during pyrolysis at normal temperature (T = 25°C). The analyzer also measured the dielectric constants of pure water, pure SiC and the pyrolytic residue in different temperature sections when the microwave frequency was 2450 MHz. to the concrete measuring method is described in detail in Oleszczuk (2006). The study then estimated the relative dielectric constant ε' and the dielectric loss factor ε'' of the sludge samples (raw sludge and SiC sludge) in different stages during the high-temperature microwave pyrolysis process according to the mass proportion of the materials. Refer to Chapter 3.2 for further details. Dielectric loss caused by dielectric material, namely the volume heat, was expressed by $tg\delta$, the tangent value of the dielectric loss angle, as shown in Equation (1):

$$tg\delta = \varepsilon'' / \varepsilon' \quad (1)$$

2.5 Electromagnetic Field Simulation

The stainless steel cavity wall of the single-mode microwave oven used in the study is qualified to function as the background material of the perfect electric conductor tacitly approved by HFSS. Therefore, HFSS based on the finite element method can be used to build a simulation model to work out the electromagnetic field in the single-mode microwave cavity as shown in Figure 2. According to the structural features of the self-made single-mode microwave, the microwave feed source of the energy field simulation process was set at the left side of the model and the sludge samples were placed at the right side of the feed source, with insulation cotton installed between the sludge samples and the feed source. The sludge samples were placed at the left side of the quartz tube, and their geometric center was at the same horizontal line as the origin of the

ACCEPTED MANUSCRIPT

coordinate axis. As shown in Table 2, the plan view size of the microwave feed source was 109.2 mm×54.6 mm (length × width), with the coordinates of its central position being (0, −147, 0). Additionally, the size of the cylindrical material was 20 mm×20 mm (radius × height), with the coordinates of its central position being (0, −53, 0) and the input power of the microwave oven was 1000 W. The excitation solution model was used to solve the distribution characteristics of the microwave energy field, with the excitation frequency being 2450 MHz and the modular pattern of the single-mode microwave cavity was set to 1. The material set needed by the electric field distribution simulation model includes the relative dielectric constant ε' and the dielectric loss factor ε'' in different stages during the pyrolysis process of sludge. Simulation calculation enables simulation images showing variations in corresponding electric field distribution to be obtained and the corresponding electrical field intensity values can be calculated. The corresponding magnetic field distribution variation and magnetic field intensity value can then be calculated by inputting the relative permeability and tangent value of the magnetic loss angle.

3 RESULTS AND DISCUSSION

3.1 Comparison of Temperature Rise and Weight Loss

Figure 3 shows the temperature rise and weight loss curves of raw sludge and SiC sludge heated by 1000 W microwave irradiation. Because raw sludge contains large amounts of water, heavy metals, and inorganic salts (as shown in Table 1), it can be used as a conductive medium to transform electromagnetic energy into heat. As indicated by Figure 3A, at the beginning of the pyrolysis, the temperature of raw sludge increased rapidly to a maximum of 199.5°C at 84 s, which was maintained until about 420 s, after which it slowly decreased to 190.2°C at 600 s. Almost all of the heat transformed by the sludge's absorption

ACCEPTED MANUSCRIPT

of the microwave energy was used to evaporate water; therefore, the temperature was always no more than 200°C, which is close to maximum pyrolysis temperature of 200°C proposed by Menéndez et al. (2002). The weight of the sludge decreased from 20 g at the beginning of the pyrolysis to 3.08 g at 420 s, and then it gradually decreased till it was stabilized at 3.04 g, with the weight loss ratio reaching 84.8%. These findings indicated that after most of the water in the sludge was dried at 420 s, the weight loss of the sludge became very slow. Accordingly, the pyrolysis of raw sludge under microwave conditions is mainly dominated by water evaporation, which might be accompanied by the volatilization of some organic materials. This is because the H/C ratio of the sludge reaches 1.88 and there are many water-soluble aliphatic hydroxy acids (Hii et al. 2014). Since almost all of the heat produced by the sludge's absorption and transformation of the microwave energy was used to evaporate water, the temperature of the sludge could not increase; therefore, high-temperature pyrolysis could not be realized.

As shown in Figure 3B, under microwave irradiation, the temperature of SiC sludge increased rapidly after a slow increase in the initial stage, then slowly increased to 1131.7°C at the end of the pyrolysis (600 s). The corresponding sludge weight gradually tended to ease after a rapid decrease in the initial stage and the weight of residual sludge at the end of pyrolysis was 25.3% of the initial weight. This variation is similar to the results reported by Domínguez et al. (2006) and Trung et al. (2013). The temperature rise and weight loss of SiC sludge can be divided into three stages, water evaporation, sludge pyrolysis and secondary pyrolysis. During the first stage (0 s – 156 s), the temperature of the sludge increased from the initial 26.3°C to 301.8°C, after which the sludge absorbed a lot of heat and the water gradually evaporated from the sludge until it dried. Due to the

ACCEPTED MANUSCRIPT

relatively high heating rate, the weight loss areas of the sludge overlapped (Zuo et al., 2011) and some of the organic materials precipitated during the later period of the water evaporation stage. In the second stage (156 s – 354 s), the temperature of the sludge rapidly increased to 1050.1°C, while the weight of the sludge decreased slowly. These findings indicate that this stage mainly consists of two kinds of weight loss, namely the precipitation of volatile organic materials and the high-temperature pyrolysis of organic materials that are difficult to pyrolyze. Moreover, this process is usually accompanied by secondary pyrolysis of a small amount of macromolecular organic compounds. During the third stage (354 s – 600 s), the temperature of the sludge continued to rise slowly to 1131.7°C. Relatively stable high-temperature conditions contributed to transformation of a portion of the macromolecular substances into micromolecular substances and thereby completed the secondary pyrolysis. At this time, the weight loss ratio of the sludge reached 93.4% (excluding SiC).

3.2 Estimation of Dielectric Constants during Sludge Pyrolysis

Studies have shown that the dielectric constants of composite materials with water as the main dielectric conductor are affected by the material's properties and environmental factors. The relative dielectric constant and dielectric loss factor decrease as the water content (wt.%) decreases. Under a microwave frequency of 2450 HMz within a temperature range of 0°C to 100°C, the measured temperature varying coefficient of the relative dielectric constant of pure water $\alpha \approx -0.3/°C$ and the temperature varying coefficient of the dielectric loss factor $\alpha \approx 0.02/°C$. Since pyrolysis of raw sludge is similar to the sludge drying process under the microwave conditions, the relative dielectric constant ε' and the dielectric loss factor ε'' of the sludge samples in different stages of pyrolysis can be

ACCEPTED MANUSCRIPT

calculated by Equation (2) and (3):

$$\varepsilon' = \mathbf{wt.\ \%*\alpha*(T-T_0)+}\varepsilon'_0 \quad (2)$$

$$\varepsilon'' = \mathbf{wt.\ \%*\alpha*(T-T_0)+}\varepsilon''_0 \quad (3)$$

It is pointed out that both the relative dielectric constant and dielectric loss factor of general dielectric conductors are positively correlated with temperature at the same frequency (Mouchon and Colomban, 1996;). In later stages of the microwave pyrolysis of SiC sludge, apart from SiC, the sludge pyrolysis residue can also be used as a good microwave absorbing material to transform electromagnetic energy into heat (Deng et al., 2014). Under a microwave frequency of 2450 MHz and within the temperature range of 0°C to 1000°C, the measured temperature varying coefficients of the relative dielectric constant and dielectric loss factor of pure SiC are α1 ≈ 0.15/100°C and α2 ≈ 0.007/100°C, respectively, while the measured temperature varying coefficients of the relative dielectric constant and the dielectric loss factor of the pyrolysis residue are α3 ≈ 0.13/100°C and α2 ≈ 0.012/100°C, respectively. At a normal temperature, ε'_0, the measured relative dielectric constants of pure SiC and pyrolysis residue are 17.26 and 43.52, respectively, while for ε''_0, the dielectric loss factors are 4.93 and 9.87, respectively. The relative dielectric constant ε' and dielectric loss factor ε'' of sludge samples during different stages of pyrolysis can be calculated by the sum of dielectric constants of different proportions of SiC and pyrolysis residue at various temperatures.

Table 3 shows the estimated dielectric constants of raw sludge during different stages of the microwave pyrolysis process. As shown in the table, the relative dielectric constant ε' and dielectric loss factor ε'' of the sludge sample gradually decreased with extension

ACCEPTED MANUSCRIPT

of the pyrolysis time. When the pyrolysis began (t = 0 s), the ε' of raw sludge (wt.% = 85%) reached 58.66, which was lower than the ε_0' of pure water (77.80) at normal temperature. When t = 420 s, the temperature of the sludge rose to 200°C and the weight of the residual sludge decreased to 3.2 g, indicating that most of the water in the sludge had evaporated. At this time, ε', the relative dielectric constant of the sludge sample, decreased to 3.25, which was related to the small amount of inorganic salts, heavy metals (see Table 1) and water remaining in the sludge. ε_0'', the dielectric loss factor of the sludge, decreased from 16.02 when pyrolysis started to 0.36 at the end of pyrolysis. However, tanδ, the tangent value of the dielectric loss angle of the sludge, increased first, then decreased. This was mainly because increasing temperature can improve the conductivity of the conducting medium, which improves the dielectric loss. Nevertheless, during the later period of pyrolysis, the temperature no longer increased and the gradual decrease of water content in the sludge gradually reduced the tangent value of the dielectric loss angle from 0.52 at 198 s to 0.11 at the end of the reaction.

Table 4 presents the estimated dielectric constants of SiC sludge during different stages of the microwave pyrolysis process. The relative dielectric constant and dielectric loss factor of the sludge samples at different stages of the pyrolysis process were characterized by an initial decrease followed by an increase. At normal temperature, the dielectric constant and dielectric loss factor of watery sludge amended with the microwave absorbing material SiC reached 75.41 and 27.22, respectively, while those of raw sludge were only 58.66 and 16.02. These findings indicate that adding microwave absorbing material to the sludge can improve its dielectric properties, which is relatively consistent with the

ACCEPTED MANUSCRIPT

assumption proposed by Zuo et al. (2011). When T = 156 s, water contained in the sludge was dried and SiC became the only microwave absorbing material; thus, the dielectric constant of the sludge decreased significantly. However, as the pyrolysis process constantly progressed, the mass fraction of SiC in the sludge became increasingly larger, the dielectric constant of SiC sludge increased gradually and the formation of the pyrolysis residue further improved the dielectric constant. Therefore, from t = 255 s to the end of the reaction, both the relative dielectric constant and dielectric loss factor of SiC sludge gradually increased. When t = 600 s, the relative dielectric constant ε' and dielectric loss factor ε'' of SiC sludge reached 24.34 and 5.96, respectively. The corresponding tangent value of dielectric loss decreased from 0.36 when pyrolysis began to 0.20, then slowly returned to 0.26, implying that after the water has evaporated to dryness, the mixed sludge's ability to absorb and transform the microwave energy is gradually strengthened.

3.3 Analysis of Variations in Electromagnetic Field during Microwave Pyrolysis of Sludge Based on HFSS Simulation

The pyrolysis of organic materials under microwave irradiation is caused by the joint action of the electromagnetic effect and the heat conversion and conduction effect (Ciacci et al., 2010). However, the mechanism by which these effects lead to temperature rise and pyrolysis remains unknown (Menéndez et al. 2004; Font et al. 2005; Mohamed et al., 2016); thus, it is extremely important to study the mechanism of temperature rise during pyrolysis of sludge. Dielectric material absorbs microwave energy to generate the electromagnetic field and converts part of the electromagnetic energy into heat through dielectric loss. The heat acts on the sludge to increase the temperature so that pyrolysis occurs, while the change in temperature leads to constant changes in the dielectric constant of the dielectric

ACCEPTED MANUSCRIPT

material (Domínguez et al., 2006), and the corresponding electromagnetic field changes as well. The three-dimensional simulation software HFSS was used to simulate and calculate the electromagnetic field distribution during different stages of the microwave pyrolysis of sludge based on the estimated dielectric constants of sludge samples collected during these states (see Table 3 and Table 4) to preliminarily explore the mechanism of temperature rise during the microwave pyrolysis of sludge. Since the magnetic field distribution and electric field distribution basically shared the same variation pattern, Figure 4 only presents the distribution and variation of the electric field in the microwave cavity during different stages of pyrolysis. Table 5 presents the corresponding maximum electric field strength value Emax, and its average value Eavg to explain the differences between raw sludge and SiC sludge during the temperature rise and weight loss process under microwave irradiation from a micro perspective.

3.3.1 Raw Sludge

As shown in Figure 4(a), the electric field generated by raw sludge under microwave irradiation in the microwave cavity can be divided into four standing wave areas, and all of the standing wave areas corresponding to the maximum electric field intensity that occurred in different periods of time appeared near the sample area. These findings imply that the water contained in raw sludge can be used as a microwave absorbing material to absorb the electric field generated by the microwave, with a higher water content in the standing wave area indicating a greater corresponding electric field strength. With the continuous evaporation and diffusion of water, the electric field gradually decreased from the sample area to the periphery. When t = 0 s, the maximum electric field intensity was concentrated in the sample area, with the Emax being 2.94×10^4 V/m and the electric field intensity in the

ACCEPTED MANUSCRIPT

other three standing wave areas being comparatively small. Although the tangent value of the dielectric loss angle tanδ was 0.27, which was relatively high, almost all of the heat generated by the transformation of electromagnetic energy was absorbed by the water evaporation (Menéndez et al., 2002). As a result, the temperature of the sludge was relatively low (25°C). As heating was conducted, the high-intensity electric field gradually spread to the other three standing wave areas. When t = 84 s, Emax, the electric field intensity of the sludge sample area, decreased to 2.53×10^4 V/m, because water evaporation reduced the relative dielectric parameters of the sludge. There was also a significant electric field in the three standing wave areas in addition to the sample area, indicating that the water vaporized from during the sludge's absorption of heat is gradually distributed evenly in the microwave cavity, after which the water absorbs the electromagnetic wave and produces a relatively uniform electric field. Moreover, the temperature of the sludge increased rapidly during this stage, indicating that the conversion rate of heat was significantly improved relative to that of the electromagnetic energy, which was related to the significant increase of tanδ (tanδ = 0.45) in this stage. When t=198 s, the water continued to volatilize, but the temperature stabilized at about 200°C, indicating that the decline in electric field intensity caused by the decreasing relative dielectric constant reduces the quantity of heat generated by dielectric loss, while this part of heat can only support water evaporation and the temperature of the sludge no longer rises. Although the electric field intensity decreased significantly relative to the electric field intensity before pyrolysis began, the conversion rate of heat was very high relative to that of electromagnetic energy during this stage. At this time, tanδ was 0.52 (as shown in Table 3). This might have occurred because, although the dielectric constant of watery sludge

ACCEPTED MANUSCRIPT

decreases as its water content gradually decreases and its temperature increases (in agreement with Tanaka et al. (2008)), the dielectric loss factor ε'' is less affected than the relative dielectric constant ε'. As a result, Tanδ takes on a periodic increasing trend. When t=420 s, almost all of the liquid water contained in the sludge was evaporated to gas. As a result, the relative dielectric constant ε' and the tangent value of the dielectric loss angle tanδ rapidly decreased to 3.25 and 0.33, the maximum electric field intensity Emax decreased to 1.02×10^4 V/m, the conversion of electromagnetic energy to heat became very weak and there was no further temperature rise or weight loss in the sludge. When t = 600 s, the temperature decreased to about 190°C, the dielectric constant was almost unchanged, the gas in the water gradually escaped with the N_2 air flow, and the maximum electric field strength Emax in the microwave cavity decreased to about 0.88×10^4 V/m.

3.3.2 SiC Sludge

As shown in Figure 4(b), under microwave irradiation, both the electric field and the maximum electric field intensity during the pyrolysis process of SiC sludge were concentrated in the sludge sample area, and the maximum electric field intensity Emax at different times varied, decreasing rapidly at first and then gradually increasing. This response was significantly different from that observed during the microwave pyrolysis of raw sludge. When t = 0 s, although the relative dielectric constant ε' of SiC sludge was much higher than that of raw sludge, the electric field intensity in the sample area of SiC sludge only reached 3.73×10^4 V/m, which was slightly higher than the electric field intensity (2.94×10^4 V/m) during the initial stage of the microwave pyrolysis of raw sludge. This may have been because tanδ, the tangent value of the dielectric loss angle, at the

ACCEPTED MANUSCRIPT

beginning of the pyrolysis of SiC sludge reached 0.36, and a large part of the microwave energy absorbed by the SiC sludge was converted into heat for the heating and pyrolysis of the sludge due to the dielectric loss. As a result, the sludge temperature within 0–156 s rose rapidly from 25°C to about 300°C and water evaporation in the sludge absorbed a lot of heat. Because of the relatively large efficiency during conversion from the electromagnetic energy to heat, the electric field strength in the sample area was maintained at a low level. When t = 156 s, the relative dielectric constant ε' of dry SiC sludge decreased to 10.91, the maximum electric field intensity Emax in the corresponding sample area only reached 1.28×10^4 V/m and the average electric field intensity Eavg decreased to 0.79 (Table 5). This was mainly because, after the evaporation of water, the dielectric constant of the sludge decreased remarkably, the weight of the mixed sludge was only 34.5% of that of the original mixed sludge (as shown in Figure 3B), and the weight of SiC sludge accounted for 62.5% of the weight of the remaining mixed sludge. As the pyrolysis process of dry sludge continued, from t = 156 s to t = 354 s, the ε' of SiC sludge increased from 18.84 to 21.02 and the maximum electric field intensity Emax in the corresponding sample area increased from 3.23×10^4 V/m to 3.51×10^4 V/m. Additionally, the sludge temperature increased at an average rate of 200°C/min, and this was accompanied by weight loss of the precipitation of volatile organic materials, as well as the high-temperature pyrolysis of organic materials that are difficult to pyrolyze. These phenomena indicate that after the water is evaporated, SiC and the newly generated pyrolysis residue become the microwave-absorbing materials in the mixed sludge and constantly convert the microwave energy into heat to be used in the pyrolysis and temperature rise of the sludge. The constantly increasing mass proportion and temperature of SiC in the mixed sludge gradually increase the relative dielectric constant

ACCEPTED MANUSCRIPT

ε' and the tangent value of the dielectric loss angle tanδ of the mixed sludge (Mu et al., 2015), which enhances the mixed sludge's ability to absorb the microwave energy and convert the heat. This phenomenon also agrees with the results of studies by Schuller et al. (2007) and Battat and Calame (2007). As pointed out by Battat and Calame (2007), ε' and ε'', the real part and imaginary part of the dielectric constant of the Al_2O_3/SiC mixture, constantly increase as the SiC content and temperature increase when the microwave frequency is 1 MHz–18 GHz. When t=255 s, the other three standing wave areas (except the sludge sample area) were basically destroyed, probably because the temperature rose rapidly during this stage and the fast pyrolysis and complicated mixed reaction led to unstable components of the material and product. At the end of pyrolysis (when t = 600 s), the maximum electric field intensity Emax in the sludge sample area reached 4.03×10^4 V/m, which was 4.58 times that of pure sludge. During this stage, the temperature increased slowly, the sludge continued to absorb heat and secondary pyrolysis occurred until the end of the reaction.

3.4 Preliminary Exploration on the Temperature Rise and Weight Loss Mechanism during the Microwave Pyrolysis of SiC Sludge

Evaluation of the temperature rise and weight loss curves, dielectric constants and variations in the electric field distribution during the microwave pyrolysis of raw sludge and SiC sludge revealed significant differences between the two microwave pyrolysis processes. To investigate the main factors influencing the temperature rise and weight loss during microwave pyrolysis of sludge, Pearson' correlation analysis was conducted using (Statistic Package for Social Science) SPSS to explore the relationship between temperature

ACCEPTED MANUSCRIPT

rise and weight loss of the sludge and ε', tanδ and the electric field intensity. Table 6 shows the calculated results.

During the microwave heating process of raw sludge, its ability to absorb and convert the electromagnetic energy gradually decreased as the water content in the sludge decreased, and the sludge produced less and less heat. Moreover, since abundant heat was absorbed by water evaporation, the temperature of the sludge was unable to constantly increase, and the organic materials and materials that were difficult to pyrolyze were pyrolyzed at a high temperature; thus, the microwave pyrolysis process of raw sludge is similar to that of a sludge drying process under the action of the electromagnetic field. Correlation analysis indicated that the weight loss of the sludge basically shares the same variation pattern as that of ε' and the electric field intensity ($r \geq 0.97$), while the correlation between temperature rise of the sludge and ε' was 0.91, and a relatively high correlation with electric field intensity ($r = -0.75$) was observed. After the water was evaporated to dryness, the temperature tended to be stabilized, and the r values ($r = 0.50$, $r = 0.58$) decreased correspondingly. There was no significant correlation observed between temperature rise and weight loss of raw sludge and tanδ. These findings indicate that the temperature rise and weight loss of raw sludge during the microwave pyrolysis process are mainly affected by electromagnetic effects rather than the heat conduction effect. Moreover, the electromagnetic field distribution of the microwave pyrolysis process of raw sludge based on HFSS simulation can accurately reflect the entire temperature increase and weight loss process of raw sludge during microwave pyrolysis.

Only the water contained in raw sludge has a dielectric effect on the microwave

ACCEPTED MANUSCRIPT

electromagnetic energy. However, water, SiC and the generated pyrolysis residue contained in SiC sludge all have dielectric effects on the microwave electromagnetic energy. As indicated by the data shown in Table 6, the temperature rise and weight loss of SiC sludge is correlated with both ε' and tanδ, but its correlation with the former is obviously more significant than with the latter. Thus, it can be deduced that the microwave pyrolysis of SiC sludge is affected by the electromagnetic effect and the heat conversion and conduction effect at the same time, with the electromagnetic effect having a greater influence. This might be because, during the stage when water is evaporated and organic materials are precipitated and during the high-temperature pyrolysis stage, the pyrolysis residue is continuously generated and participates in the pyrolysis of residual organic matters as the absorbing material in its original position (Deng et al., 2014; Wu et al., 2015). Since the relative dielectric constant ε' of the pyrolysis residue is higher than that of SiC, while its tanδ is lower than that of SiC, the sludge sample's ability to absorb microwave electromagnetic energy is rapidly strengthened, but its ability to convert the microwave energy into heat increases slowly. Therefore, when compared with raw sludge, the pyrolysis of SiC sludge is more significantly affected by the electromagnetic effect.

In addition, there was no significant correlation between the temperature rise and weight loss throughout the pyrolysis process and the electric field intensity, as indicated by an $r \leq 0.4$. These findings imply that HFSS is unable to accurately simulate the entire temperature rise and weight loss process during the microwave pyrolysis of SiC sludge. However, after the water contained in the sludge is evaporated to dryness, there was a significant correlation between the electric field intensity and the temperature rise and weight loss of dry sludge, with the r value reaching 0.87 and 0.98, respectively. These

ACCEPTED MANUSCRIPT

findings indicate that HFSS can accurately simulate the variations in the electromagnetic field during the pyrolysis process of dry sludge containing SiC and can relatively precisely reflect the temperature rise and weight loss process of dry sludge containing SiC, providing a new approach to realize the simulation and prediction of the microwave pyrolysis of sludge containing wave-absorbing materials. In other words, the pyrolysis efficiency of the mixed sludge can be deduced by measuring the dielectric constant of the sludge containing wave-absorbing matters and inputting it into the model to obtain the electric field distribution, which saves abundant tentative experimental resources and energy consumption. Nevertheless, there is currently no data describing this process; accordingly, a great deal of research is still needed to provide basic data for the further optimization and verification of the simulation model.

4. CONCLUSIONS

The addition of SiC enhanced the pyrolysis of sludge, which is closely related to the improvement of the electromagnetic field strength in the sludge sample area. Compared with the heat conduction effect, the electromagnetic effect influences more on the temperature increase and weight loss of sludge. HFSS can simulate the electromagnetic field distribution during the microwave pyrolysis of sludge, which provides a probability to explain the temperature increase and weight loss mechanism during microwave pyrolysis of sludge from the perspective of electromagnetic field.

Acknowledgements

This paper was supported by the Shenzhen Science and Technology Planning Project (Grant Nos. JCYJ20150828113927076, JCYJ20130329113322731), the China National

ACCEPTED MANUSCRIPT

Natural Science Foundation (50906058) and the Natural Science Foundation of SZU (No. 827-000037). We would also like to thank LetPub (www.letpub.com) for its linguistic assistance during the preparation of this manuscript.

ACCEPTED MANUSCRIPT

ACCEPTED MANUSCRIPT

References

[1] Abubakar, Z., Salema, A.A., Ani, F.N., 2013. A new technique to pyrolyse biomass in a microwave system: effect of stirrer speed. Bioresour. Technol. 128, 578–585.

[2] Battat, J., Calame, J.P., 2007. Analysis of the complex dielectric permittivity behavior of porous Al_2O_3-SiC composites in the 1 MHz to 18 GHz frequency range. J. Mater. Res. 22, 3292–3297.

[3] Borges, F.C., Du, Z., Xie, Q., Trierweiler, J.O., Cheng, Y., Wan, Y., Liu, Y., Zhu, R., Lin, X., Chen, P., Ruan, R., 2014. Fast microwave assisted pyrolysis of biomass using microwave absorbent. Bioresour. Technol. 156, 267–274.

[4] Breulmann, M., van Afferden, M., Fuehner, C., 2015. Biochar: Bring on the sewage. Nature 518, 483–483.

[5] Bridle, T.R., Pritchard, D., 2004. Energy and nutrient recovery from sewage sludge via pyrolysis. Water Sci. Technol. 50, 169–175.

[6] Bu, Q., Lei, H., Ren, S., Wang, L., Zhang, Q., Tang, J., Ruan, R., 2012. Production of phenols and biofuels by catalytic microwave pyrolysis of lignocellulosic biomass. Bioresour. Technol. 108, 274–279.

[7] Cao, J.P., Zhao, X.Y., Morishita, K., Wei, X.Y., Takarada, T., 2010. Fractionation and identification of organic nitrogen species from bio-oil produced by fast pyrolysis of sewage sludge. Bioresour. Technol. 101, 7648–7652.

[8] Ciacci, T., Galgano, A., Blasi, C.D., 2010. Numerical simulation of the electromagnetic field and the heat and mass transfer processes during microwave-induced pyrolysis of a wood block. Chem. Eng. Sci. 65, 4117–4133.

[9] Dai, Q.J., Jiang, X.G., Jiang, Y.F., Jin, Y.Q., Wang, F., Chi, Y., Yan, J.H., Xu, A.H.,

ACCEPTED MANUSCRIPT

2014. Temperature influence and distribution in three phases of PAHs in wet sewage sludge pyrolysis using conventional and microwave heating. Energy and Fuels 28, 3317–3325.

[10] Deng, W.Y., Su, Y.X., Liu, S.G., Shen, H.G., 2014. Microwave-assisted methane decomposition over pyrolysis residue of sewage sludge for hydrogen production. Int. J. Hydrogen Energ. 39, 9169–9179.

[11] Domínguez, A., Menéndez, J.A., Inguanzo, M., Pis, J.J., 2005. Investigations into the characteristics of oils produced from microwave pyrolysis of sewage sludge. Fuel Process. Technol. 86, 1007–1020.

[12] Domínguez, A., Menéndez, J.A., Inguanzo, M., Pís, J.J., 2006. Production of bio-fuels by high temperature pyrolysis of sewage sludge using conventional and microwave heating. Bioresour. Technol. 97, 1185–1193.

[13] Dinulovic, M., Rasuo, B., 2009. Dielectric properties modeling of composite materials. FME Transactions 37, 117–122.

[14] Font, R., Fullana, A., Conesa, J., 2005. Kinetic models for the pyrolysis and combustion of two types of sewage sludge. J. Anal. Appl. Pyrolysis 74, 429–438.

[15] Fonts, I., Juan, A., Gea, G., Murillo, M., Sanchez, J., 2008. Sewage sludge pyrolysis in fluidized bed: Influence of operational conditions on the product distribution. Ind. Eng. Chem. Res. 47, 5376–5385.

[16] Geedipalli, S.S.R., Rakesh, V., Datta, A.K., 2007. Modeling the heating uniformity contributed by a rotating turntable in microwave ovens. J. Food Eng. 82, 359–368.

[17] Giessler, C., Thess. A., 2009. Numerical simulation of electromagnetically controlled thermal convection of glass melt in a crucible. INT. J. HEAT. MASS. TRAN. 52,

ACCEPTED MANUSCRIPT

3373–3389.

[18] Hii, K., Baroutian, S., Parthasarathy, R., Gapes, D.J., Eshtiaghi, N., 2014. A review of wet air oxidation and thermal hydrolysis technologies in sludge treatment. Bioresour. Technol. 155, 289–299.

[19] Hong, J.L., Hong, J.M., Otaki, M., Jolliet, O., 2009. Environmental and economic life cycle assessment for sewage sludge treatment processes in Japan. Waste Manage. 29, 696–703.

[20] Inguanzo, M., Domínguez, A., Menéndez, J.A., Blanco, C.G., Pis, J.J., 2002. On the pyrolysis of sewage sludge: the influence of pyrolysis conditions on solid, liquid and gas fractions. J. Anal. Appl. Pyrolysis 63, 209–222.

[21] Kim, Y., Parker, W., 2008. A technical and economic evaluation of the pyrolysis of sewage sludge for the production of bio-oil. Bioresour. Technol. 99, 1409–1416.

[22] Menéndez, J.A., Inguanzo, M., Pis, J.J., 2002. Microwave-induced pyrolysis of sewage sludge. Water Res. 36, 3261–3264.

[23] Menéndez, J.A., Domínguez, A., Inguanzo, M., Pis, J.J., 2004. Microwave pyrolysis of sewage sludge:Analysis of the gas fraction. J. Anal. Appl. Pyrol. 71, 657–667.

[24] Mohamed, B.A., Kim, C.S., Ellis, N., Bi, X.T., 2016. Microwave-assisted catalytic pyrolysis of switchgrass for improving bio-oil and biochar properties. Bioresour. Technol. 201, 121–132.

[25] Mohan, D., Pittman, C.U., Steele, P.H., 2006. Pyrolysis of wood/biomass for bio-oil: a critical review. Energy Fuels 20, 848–889.

[26] Mu, Y., Zhou, W.C., Hu, Y., Wang, H.Y., Luo, F., Ding, D.H., Qing, Y.C., 2015. Temperature-dependent dielectric and microwave absorption properties of

ACCEPTED MANUSCRIPT

SiC/SiC–Al_2O_3 composites modified by thermal cross-linking procedure. J. Eur. Ceram. Soc. 35, 2991–3003.

[27] Mulchandani, A., Westerhoff, P., 2016. Recovery opportunities for metals and energy from sewage sludges. Bioresour. Technol. 215, 215–226.

[28] Oleszczuk, P., 2006. Persistence of polycyclic aromatic hydrocarbons (PAHs) in sewage sludge-amended soil. Chemosphere 65, 1616–1626.

[29] Oasmaa, A., Solantausta, Y., Arpiainen, V., Kuoppala, E., Sipila, K., 2010. Fast pyrolysis bio-oils from wood and agricultural residues. Energy Fuels 24, 1380–1388.

[30] Park, E.S., Kang, B.S., Kim, J.S., 2008. Recovery of oils with high caloric value and low contaminant content by pyrolysis of digested and dried sewage sludge containing polymer flocculants. Energy Fuels 22, 1335–1340.

[31] Peccia, J., Westerhoff, P., 2015. We should expect more out of our sewage sludge. Environ. Sci. Technol. 49, 8271–8276.

[32] Rattanadecho, P., 2006. The simulation of microwave heating of wood using rectangular wave guide: influence of frequency and sample size. Chem. Eng. Sci. 61, 4798–4811.

[33] Mouchon, E. Colomban, P., 1996. Microwave absorbent: preparation, mechanical properties and r.f.-microwave conductivity of SiC (and/or mullite) fibre reinforced Nasicon matrix composites. J. Mater. Sci. 31, 323-334.

[34] Salema, A.A., Ani, F.N., 2011. Microwave induced pyrolysis of oil palm biomass. Bioresour. Technol. 102, 3388–3395.

[35] Schuller, J.A., Zia, R., Taubner, T., Brongersma, M.L., 2007. Dielectric metamaterials based on electric and magnetic resonances of silicon carbide particles. Phys. Rev. Lett.

ACCEPTED MANUSCRIPT

99, 107401.

[36] Tanaka, F., Uchino, T., Hamanaka, D., Atungulu, G.G., Hung, Y.C., 2008. Dielectric properties of mirin in the microwave frequency range. J. Food Eng. 89, 435–440.

[37] Tian, Y., Zuo, W., Ren, Z.Y., Chen, D.D., 2011. Estimation of a novel method to produce bio-oil from sewage sludge by microwave pyrolysis with the consideration of efficiency and safety. Bioresour. Technol. 102, 2053–2061.

[38] Trung, N.T., Jensen, P.A., Dam-Johansen, K., Knudsen, N.O., Sorensen, H.R., 2013. Influence of the pyrolysis temperature on sewage sludge product distribution, bio-oil and char properties. Energy and Fuels 27, 1419–1427.

[39] Tsai, W.T., Lee, M.K., Chang, J.H., Su, T.Y., Chang, Y.M., 2009. Characterization of bio-oil from induction-heating pyrolysis of food-processing sewage sludges using chromatographic analysis. Bioresour. Technol. 100, 2650–2654.

[40] Wu, D., Tian, Y., Wen, X.W., Zuo, W., Liu. H.L., Lee, D.J., 2015. Studies on the use of microwave for enhanced properties of glass-ceramics produced from sewage sludge pyrolysis residues (SSPR). J. Taiwan Inst. Chem. E. 48, 81–86.

[41] Xie, Q.L., Peng, P., Liu, S.Y., Min, M., Cheng, Y.L., Wan, Y.Q., Li, Y., Lin, X.Y., Liu, Y.H., Chen, P., Ruan, R., 2014. Fast microwave-assisted catalytic pyrolysis of sewage sludge for bio-oil Production. Bioresour. Technol. 172, 162–168.

[42] Yamada, H., Chayahara, A., Mokuno, Y., 2005. Modeling and numerical analyses of microwave plasmas for optimizations of a reactor design and its operating conditions. Diam. Relat. Mater. 14, 1776–1779.

[43] Yamada, H., Chayahara, A., Mokuno, Y., 2006. Numerical analyses of a microwave plasma chemical vapor deposition reactor for thick diamond syntheses. Diam. Relat.

ACCEPTED MANUSCRIPT

Mater. 15, 1389–1394.

[44] Zhang, J., Tian, Y., Cui, Y.N., Zuo, W., Tan, T., 2013. Key intermediates in nitrogen transformation during microwave pyrolysis of sewage sludge: A protein model compound study. Bioresour. Technol. 132, 57–63.

[45] Zuo, W., Tian, Y., Ren, N.Q., 2011. The important role of microwave receptors in bio-fuel production by microwave-induced pyrolysis of sewage sludge. Waste Manage. 31, 1321-1326.

ACCEPTED MANUSCRIPT

ACCEPTED MANUSCRIPT

Figure Captions:

Fig. 1. A Schematic of the Microwave Pyrolysis Device.

Fig. 2. Simulation Model to Solve the Electromagnetic Field in the Single-mode Microwave Cavity.

Fig. 3. Temperature Rise and Weight Loss Curves of Raw Sludge and SiC Sludge (A: Raw Sludge; B: SiC Sludge)

Fig. 4. Comparison of Variation of Electric Field Distribution during the Microwave Pyrolysis of Raw Sludge and SiC Sludge (A: Raw Sludge; B: SiC Sludge)

ACCEPTED MANUSCRIPT

ACCEPTED MANUSCRIPT

Table 1 Chemical characteristics of raw sewage sludge.

Proximate analysis (wt. %)		Ultimate analysis[a,b] (wt. %)						Calorific value
Ash[a]	Volatile matter[a]	C	O[c]	H	N	S	H/C	2.78 MJ/kg
31.27	68.73	50.44	30.53	7.90	9.22	1.91	1.88	
Heavy metals (ppm)								
Cr	Cd	Cu		Zn		Ni		Pb
25.20	nd	nd		882.00		23.24		37.32
Inorganic elements [d] (wt. %)								
Na	Si	Cl		Ca		Fe		Mg
0.59	9.56	1.23		1.54		6.78		0.646
Al	K	Mn		Zr		Rb		Ti
7.01	1.34	0.04		0.051		0.014		0.34

(a, Dry base; b, Ash free basis; c, Calculated by difference; d, XRF semi-quantitative analysis)

ACCEPTED MANUSCRIPT

ACCEPTED MANUSCRIPT

Table 2 Parameters Involved in the Modeling of Electromagnetic Field Distribution Based on HFSS

Category	Content	Value
Model parameter	Size of microwave feed source	109.2 mm×54.6 mm
	Central coordinates of the microwave feed source	(0, −147, 0)
	Input power	1000 W
	Excitation frequency	2450 MHz
	Pattern number	1
	Solving pattern	Excitation
Sludge parameter	Size of the sludge sample	20 mm×20 mm
	Central coordinates of the sludge sample	(0, −53, 0)
	Relative dielectric constant	To be measured
	Tangent value of the dielectric loss angle	To be measured
	Relative permeability	To be measured
	Tangent value of the magnetic loss angle	To be measured

ACCEPTED MANUSCRIPT

ACCEPTED MANUSCRIPT

Table 3 Estimated Dielectric Constants of Raw Sludge during Different Stages of the Microwave Pyrolysis Process

Time (s)	Sewage/sludge temperature T (°C)	Sewage/sludge weight (g)	Water content (wt. %)	Dielectric constant of the sludge sample at a normal temperature		Dielectric constant of the sludge sample during different stages of the pyrolysis process		
				ε_0'	ε_0''	ε'	ε''	**tanδ**
0	25.0/25.0	17.0/20.0	85.0	58.66	16.02	58.66	16.02	0.27
84	100.0/199.5	12.8/15.8	81.0	52.09	14.10	33.87	15.31	0.45
198	100.0/200.0	6.0/9.0	66.7	25.32	4.41	10.25	5.40	0.52
420	100.0/200.0	0.2/3.2	6.3	4.67	0.32	3.25	0.39	0.12
600	100.0/190.2	0.2/3.2	5.7	4.16	0.30	3.22	0.36	0.11

ACCEPTED MANUSCRIPT

ACCEPTED MANUSCRIPT

Table 4 Estimated Dielectric Constants of SiC Sludge during Different Stages of the Microwave Pyrolysis Process

Time (s)	Sludge temperature T (°C)	SiC weight/sludge weight (g)	SiC/ pyrolysis residue mass fraction (wt. %)	Dielectric constant of the sludge sample at a normal temperature		Dielectric constant of the sludge sample during different stages of the pyrolysis process		
				ε_0'	ε_0''	ε'	ε''	**tanδ**
0	26.3	4.0/20.0	20.0/0.0	75.41	27.22	75.41	27.22	0.36
156	301.8	4.0/6.9	58.0/0.0	10.65	2.14	10.91	2.15	0.20
255	589.6	4.0/6.4	62.3/17.1	18.15	4.74	18.84	4.79	0.25
254	1050.1	4.0/5.9	67.8/18.8	19.75	5.22	21.02	5.29	0.25
600	1131.7	4.0/5.1	79.1/20.9	22.75	5.87	24.34	5.96	0.24

ACCEPTED MANUSCRIPT

ACCEPTED MANUSCRIPT

Table 5 Electric Field Intensity Value in Different Stages of Sludge Microwave Pyrolysis E ($\times 10^4$ V/m)

Time consumed by pyrolysis of raw sludge (s)	Emax	Eavg	Time consumed by pyrolysis of SiC sludge (s)	Emax	Eavg
0	2.94	1.21	0	3.73	1.35
84	2.53	0.99	156	1.28	0.79
198	1.48	0.75	255	3.23	1.02
420	1.02	0.33	354	3.51	1.21
600	0.88	0.28	600	4.03	1.52

ACCEPTED MANUSCRIPT

ACCEPTED MANUSCRIPT

Table 6 Correlation between Temperature Rise and Weight Loss and the Electric Field Intensity and the Dielectric constants (r)

Sludge	Stage	Content	ε'	tanδ	Emax	Eavg
Raw sludge	Entire pyrolysis process	Temperature rise	−0.91	0.03	−0.78	−0.75
		Weight loss	0.97	0.50	0.99	0.99
	After the water is evaporated to dryness	Temperature	0.50	0.51	0.68	0.58
		Weight loss	0.99	0.98	0.97	0.99
SiC sludge	Entire pyrolysis process	Temperature rise	−0.58	−0.47	0.41	0.40
		Weight loss	0.96	0.89	0.20	0.23
	After the water is evaporated to dryness	Temperature rise	0.97	0.72	0.93	0.98
		Weight loss	−0.93	−0.59	−0.87	−0.99

($p \leq 0.05$)

ACCEPTED MANUSCRIPT

ACCEPTED MANUSCRIPT

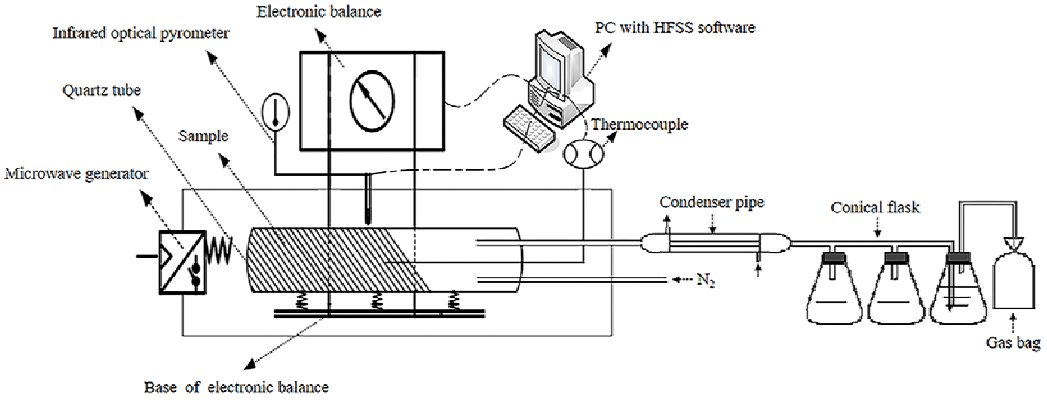

ACCEPTED MANUSCRIPT

ACCEPTED MANUSCRIPT

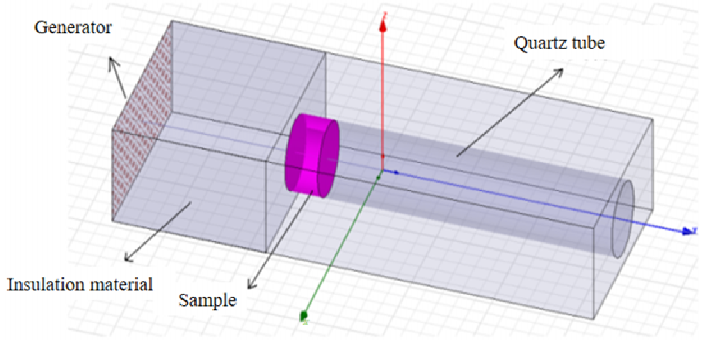

ACCEPTED MANUSCRIPT

ACCEPTED MANUSCRIPT

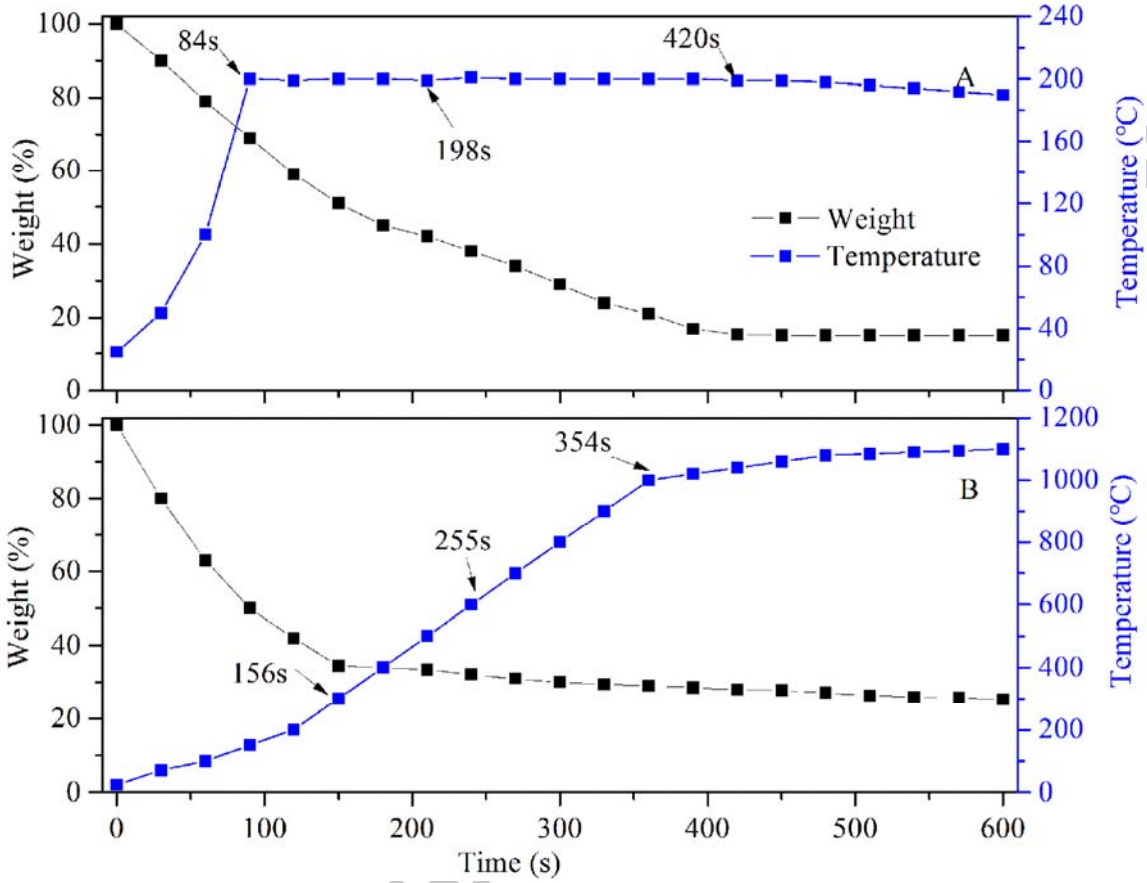

ACCEPTED

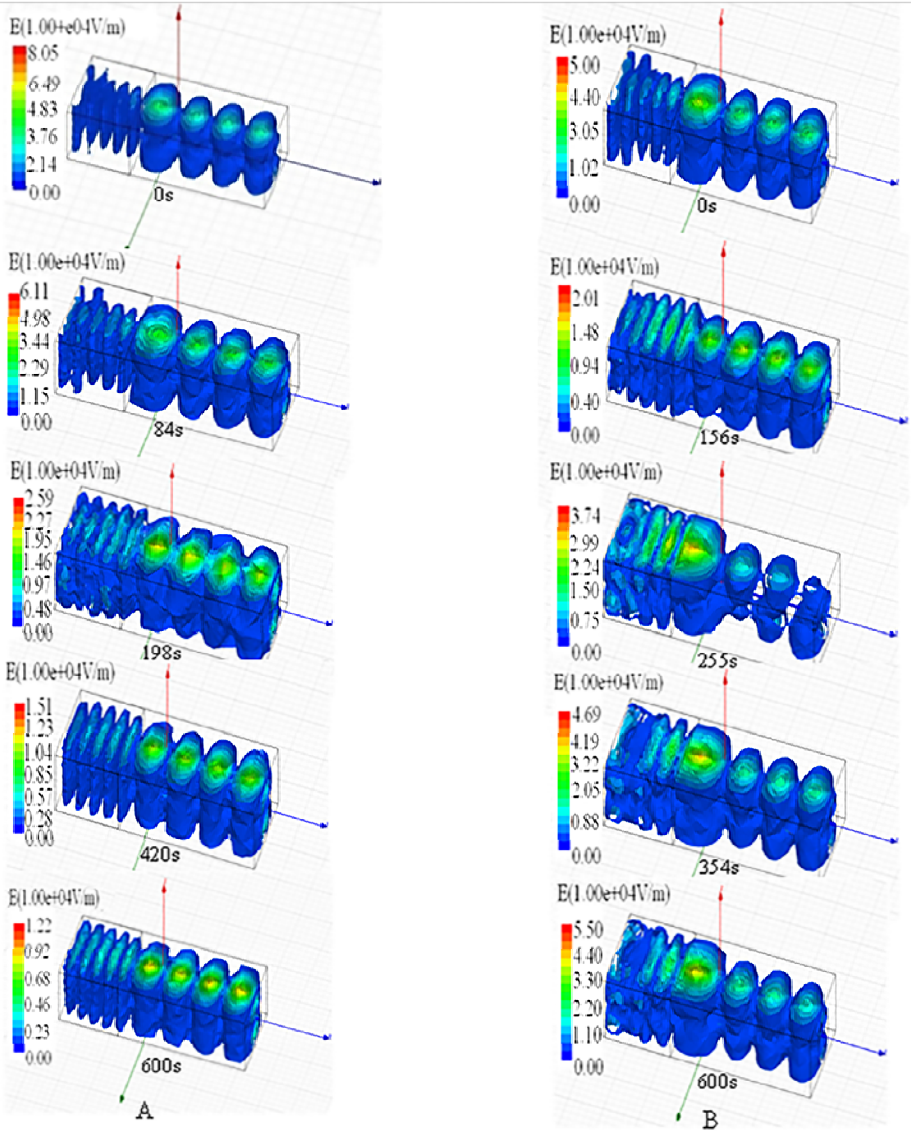
E(1.00+e04V/m)
8.05
6.49
4.83
3.76
2.14
0.00
0s
E(1.00e+04V/m)
6.11
4.98
3.44
2.29
1.15
0.00
84s
E(1.00e+04V/m)
2.59
2.27
1.95
1.46
0.97
0.48
0.00
198s
E(1.00e+04V/m)
1.51
1.23
1.04
0.85
0.57
0.28
0.00
420s
E(1.00e+04V/m)
1.22
0.92
0.68
0.46
0.23
0.00
600s
A
E(1.00e+04V/m)
5.00
4.40
3.05
1.02
0.00
0s
E(1.00e+04V/m)
2.01
1.48
0.94
0.40
0.00
156s
E(1.00e+04V/m)
3.74
2.99
2.24
1.50
0.75
0.00
255s
E(1.00e+04V/m)
4.69
4.19
3.22
2.05
0.88
0.00
354s
E(1.00e+04V/m)
5.50
4.40
3.30
2.20
1.10
0.00
600s
B

ACCEPTED MANUSCRIPT

Highlights:

(1) Dielectric constants of samples in different stages during microwave pyrolysis were estimated;

(2) A HFSS model simulating electric field distribution during microwave pyrolysis was established;

(3) Electric field and its distribution in different stages of microwave pyrolysis were simulated;

(4) Factors influencing temperature rise and weight loss during microwave pyrolysis were analyzed;

(5) The mechanism of temperature rise and weight loss during microwave pyrolysis was explored.

ACCEPTED MANUSCRIPT